EE-434 Power Electronics

Engr. Dr. Hadeed Ahmed Sher

Ghulam Ishaq Khan Institute of Engineering Sciences and Technology
Topi 23460, Pakistan

hadeed@giki.edu.pk

March 8, 2019

Overview

1. Full wave rectifier
   - UCFW| RL- Source Load
   - CFW| RL Load
2. Controlled FWR as inverter
3. Three phase rectifiers

RL-Source Load

Circuit below shows a full wave bridge rectifier with a more appropriate form of inductive load i.e., R+L+E. Such load resembles the dc motor drive circuit or battery charger applications.

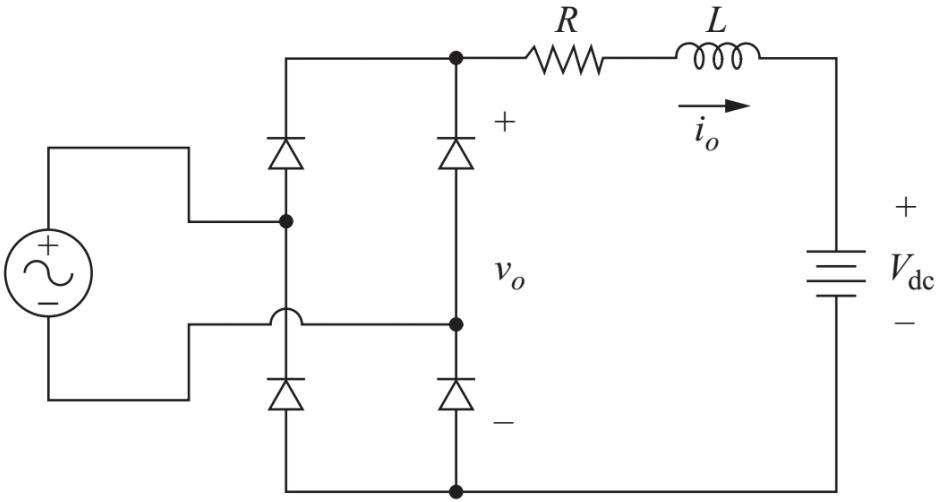

Two modes of operation are possible i.e., CCM and DCM

UCFW- RL+ Source Load- CCM

Under the CCM mode, one pair of diodes is always conducting while the voltage across the load is a full-wave rectified sine wave.
The dc(average) component of current in this topology is

$$I_o = \frac{V_o - V_{dc}}{R} = \frac{\frac{2V_m}{\pi} - V_{dc}}{R} \tag{1}$$

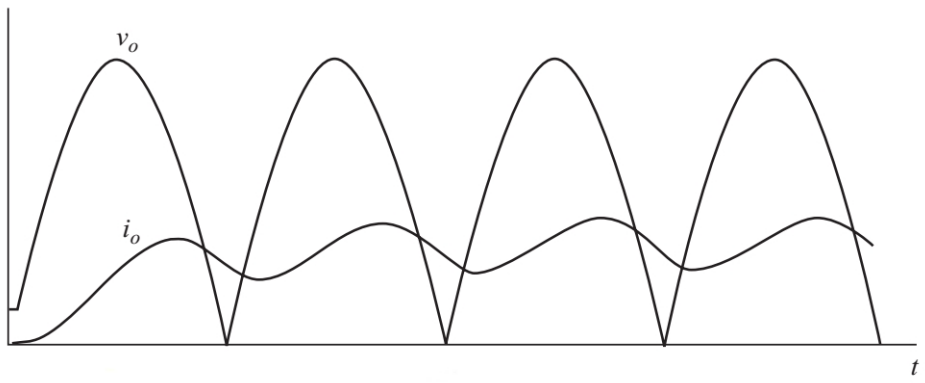

UCFW- RL+ Source Load- CCM

The sinusoidal terms in Fourier analysis are unchanged by the dc source provided that the current is continuous and is given as

$$v_o(t) = V_o + \sum_{n=2,4..}^{\infty} V_n cos(n\omega_0 t + \pi) \tag{2}$$

where, $VC_o = \frac{2V_m}{\pi}$ and $V_n = \frac{2V_m}{\pi}\left(\frac{1}{n-1} - \frac{1}{n+1}\right)$

The current in the load is then computed using the superposition by considering each frequency separately and combining the results. Note that as the harmonics increases the voltage amplitude decreases.

Example 4-3

For the full-wave bridge rectifier circuit the ac source is 120 V_{rms} at 60 Hz. Load is a series RLE circuit with R=2Ω, L=10 mH, and V_{dc}=80 V. Determine the power absorbed by the dc voltage source and the power absorb by the load resistor.

For CCM, the voltage across the load is a full-wave rectified sine wave with the Fourier series expressed in (2).

Eq. (1) is used to calculate the average current.

$$I_o = \frac{\frac{2V_m}{\pi} - V_{dc}}{R} = \frac{\frac{2\sqrt{2}(120)}{\pi} - 80}{2} = 14.0A \tag{3}$$

$$P_{dc} = I_0 V_{dc} = (14)(80) = 1120W \tag{4}$$

Since, the signal is an even signal therefore, the Fourier term has only even harmonics. Some of the terms are shown below.

n	V_n	Z_n	I_n
0	108	2.0	14.0
2	72.0	7.80	9.23
4	14.4	15.2	0.90

Example 4-3

The rms current is computed as

$$I_{rms} = \sqrt{14^2 + \left(\frac{9.23}{\sqrt{2}}\right)^2 + \left(\frac{9.23}{\sqrt{2}}\right)^2 + ...} \approx 15.46A \tag{5}$$

Power absorbed by the resistor is

$$P_R = I_{rms}^2 R = (15.46)^2(2) = 478W \tag{6}$$

CFW| RL Load

Circuit below shows a full wave full controlled bridge rectifier with an RL load. The current may be continuous or discontinuous.

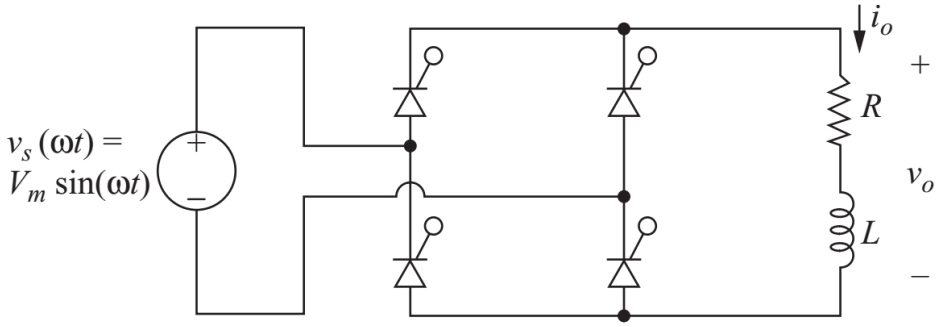

Two modes of operation are possible i.e., CCM and DCM

CFW| RL Load

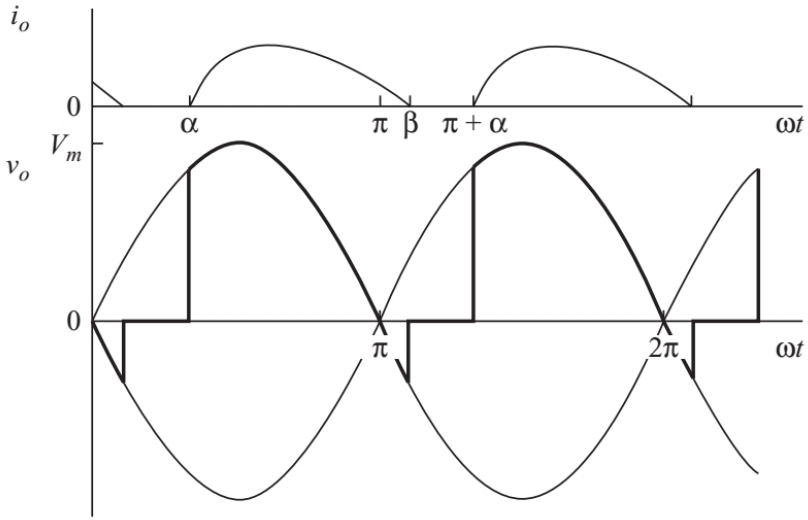

Figure shows the waveforms for discontinuous conduction mode. Assume at $\omega t = 0$ with initial current is equal to zero. S_1 and S_2 will be forward biased and S_3 and S_4 will be reverse bias for positive half cycle. At $\omega t = \alpha$ S_1 and S_2 are turned on.

Thus, all the input voltage appears across load. The output current is

$$i_o(\omega t) = \frac{V_m}{Z}[sin(\omega t - \theta) - sin(\alpha - \theta) e^{-(\omega t - \alpha)/\omega\tau}] for \alpha \leq \omega t \leq \beta \quad (7)$$

where

$$Z = \sqrt{R^2 + (\omega L)^2} \quad (8)$$

$$\theta = tan^{-1}\left(\frac{\omega L}{R}\right) \quad (9)$$

$$\tau = \frac{L}{R} \quad (10)$$

CFW| RL Load

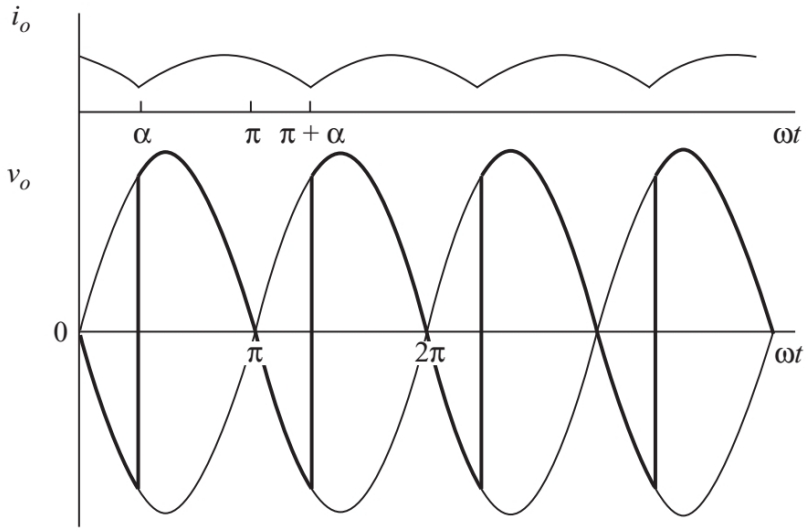

Figure shows the waveforms for continuous conduction mode. (7) becomes zero at $\omega t = \beta$.

If $\beta < \pi + \alpha$ the current remains at zero until $\omega t = \pi + \alpha$ when the gate signals are applied to S_3 and S_4 which are then forward biased. This mode of operation is called discontinuous current.

$$\beta < \alpha + \pi \implies DCM \qquad (11)$$

Example 4-7

A controlled full-wave bridge rectifier has a source of 120 V_{rms} at 60 Hz, R=10Ω, L=20 mH, and $\alpha = 60°$. Determine (a) an expression for load current, (b) the average load current, and (c) the power absorbed by the load.

Solution:

$V_m = \frac{120}{\sqrt{2}} = 169.7V$ and

$Z = \sqrt{R^2 + (\omega L)^2} = \sqrt{10^2 + (377 \times 0.02)^2} = 12.5\Omega.$

$\theta = tan^{-1}(\frac{\omega L}{R}) = 0.646$rad

$\omega\tau = \frac{\omega L}{R} = 0.754$ rad

$\alpha = 60° = 1.047rad$. Substituting in (7)

$$i_o(\omega t) = 13.6sin(\omega t - 0.646) - 21.2e^{-\omega t/0.754}A \quad (12)$$

$$for \alpha \leq \omega t \leq \beta$$

Solving $i_o(\beta)$=0 numerically for β. This gives $\beta = 3.78rad(216°)$. Since $\pi + \alpha$=4.19>β, the current is discontinuous and above expression for current is valid. Average load current is

$$I_o = \frac{1}{\pi}\int_{\alpha}^{\beta} i_o(\omega t)d(\omega t) = 7.05A \quad (13)$$

Power absorbed is

$I_{rms}^2 R = (8.35)^2(10) = 697$W

CFW| RL Load

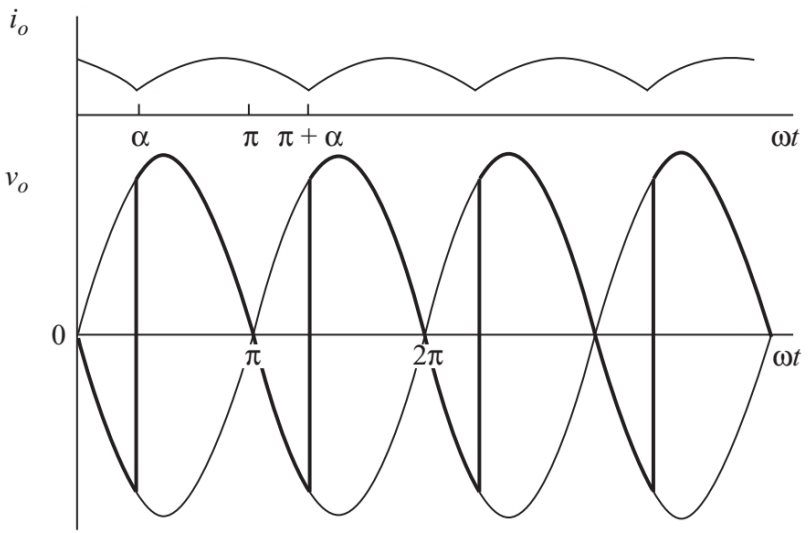

If the load current is still positive at $\omega t = \pi + \alpha$ when gate signals are applied to S_3 and S_4 then, S_3 and S_4 are turned on and S_1 and S_2 are forced off.

The initial condition for current in negative half cycle is non-zero and therefore, the current function does not repeat. The boundary between CCM and DCM occurs when $\beta = \pi + \alpha$. The equation for DCM mode cannot be applied here. The current must be greater than zero for CCM.

$$i(\pi + \alpha) \geq 0 \tag{14}$$

CFW| RL Load

Using the above equation

$$sin(\pi + \alpha - \theta)sin(\pi + \alpha - \theta)e^{-(\pi+\alpha-\alpha)/\omega\tau} \geq 0 \tag{15}$$

Using

$$sin(\pi + \alpha - \theta) = sin(\theta - \alpha) \tag{16}$$

and

$$sin\big(\theta - \alpha\big)\big(1 - e^{-(\pi/\omega\tau)}\big) \geq 0 \tag{17}$$

solving for α,

$$\alpha \leq \theta \tag{18}$$

using

$$\theta = tan^{-1}\left(\frac{\omega L}{R}\right) \tag{19}$$

The condition for CCM is

$$\alpha \leq tan^{-1}\left(\frac{\omega L}{R}\right) \tag{20}$$

CFW| RL Load

Equation (11) or (20) can be used tp establish if the load current is continuous or discontinuous.
The voltage and current in CCM mode are determined using the Fourier series expressed below

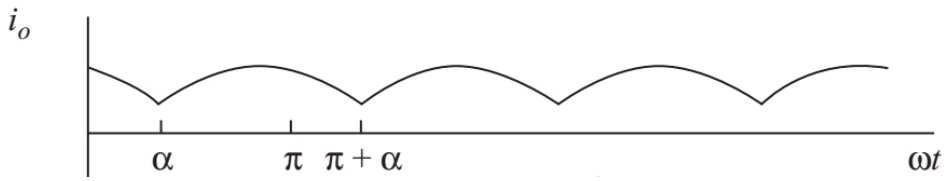

$$v_o(\omega t) = \underbrace{V_0}_{\text{DC}} + \underbrace{\sum_{n=1}^{\infty} V_n cos(n\omega_0 t + \theta_n)}_{\text{harmonics}} \tag{21}$$

This kind of waveform contains the dc part and even as well as odd harmonics.

CFW| RL Load

The dc (average) value is calculated as

$$V_o = \frac{1}{\pi}\int_{\alpha}^{\alpha+\pi} V_m sin(\omega t) d(\omega t) = \frac{2V_m}{\pi} cos\alpha \tag{22}$$

The harmonics are calculated as

$$V_n = \sqrt{a_n^2 + b_n^2} \tag{23}$$

where,

$$a_n = \frac{2V_m}{\pi}\left[\frac{cos(n+1)\alpha}{n+1} - \frac{cos(n-1)\alpha}{n-1}\right] \tag{24}$$

$$b_n = \frac{2V_m}{\pi}\left[\frac{sin(n+1)\alpha}{n+1} - \frac{sin(n-1)\alpha}{n-1}\right] \tag{25}$$

for n=2,4,6.....

CFW| RL Load

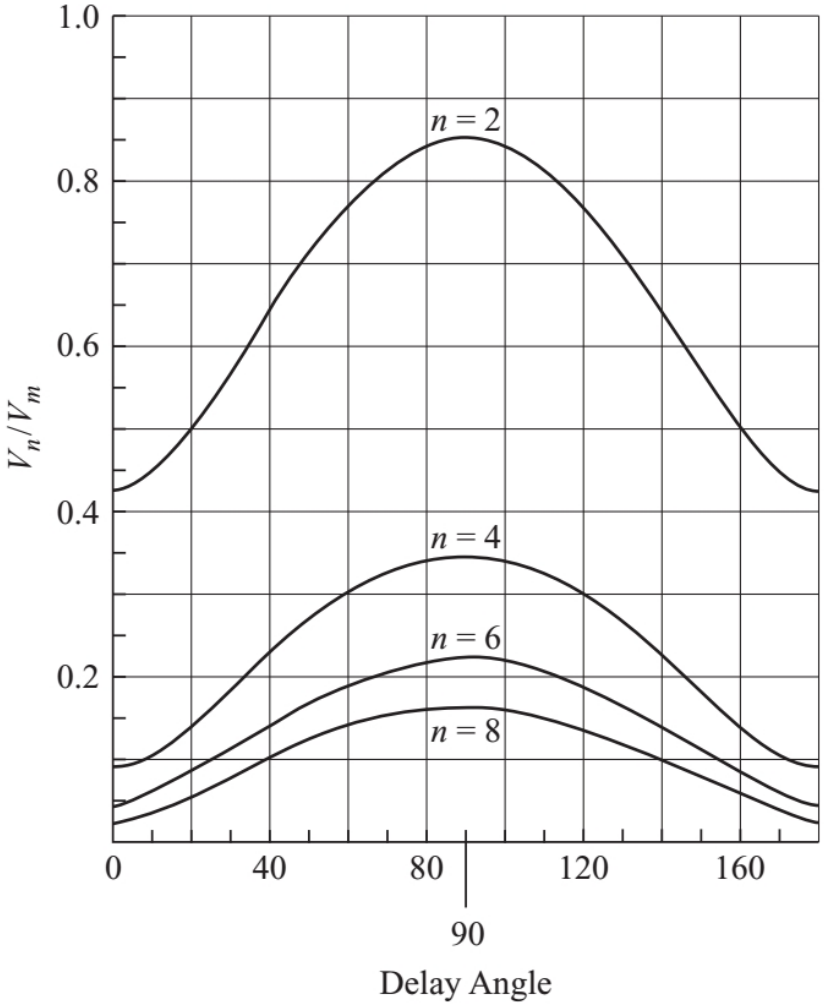

Figure shows the relationship between normalized harmonic content of output voltage and delay angle.

CFW| RL Load

The fourier series for current is determined by superposition. The current amplitude at each frequency is determined as follows.

$$I_0 = \frac{V_0}{R}$$
$$I_n = \frac{V_n}{Z_n} = \frac{V_n}{|R + jn\omega L|} \tag{26}$$

The rms current is determined by combining the rms currents for ac and dc parts

$$I_{rms} = \sqrt{I_o^2 + \sum_{n=2,4,6\ldots}^{\infty} \left(\frac{I_n}{\sqrt{2}}\right)^2} \tag{27}$$

The impedance of the inductance increases with increase in harmonic number. It may be necessary to solve for only a few terms of the series to calculate the rms current. For a large value of inductance, the ac terms will be small and therefore the current is essentially dc.

Controlled FWR as inverter

Using a fully controlled full bridge converter, power can be supplied by the load to the source.

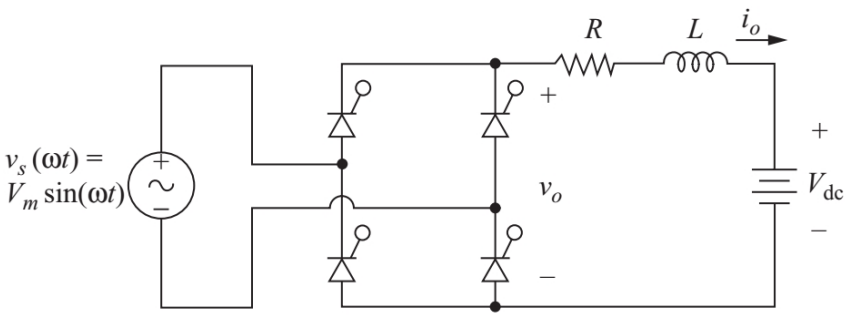

The load current must be in the direction shown because of the SCRs in the bridge. However, the power can only be supplied by the dc source if V_{dc} is negative.

For power absorbed by the bridge and transferred to the ac system, the birdge output voltage V_o must also be negative.

For a CCM the birdge output voltage is given as

$$V_o = \frac{2V_m}{\pi} cos\alpha \tag{28}$$

Controlled FWR as inverter

For delay angle more than 90 degree, the output voltage is negative. For a CCM the birdge output voltage is given as

$$90^\circ < \alpha < 180^\circ \implies V_o < 0 \tag{29}$$

The voltage waveform for $\alpha = 150^\circ$ and CCM is shown below.

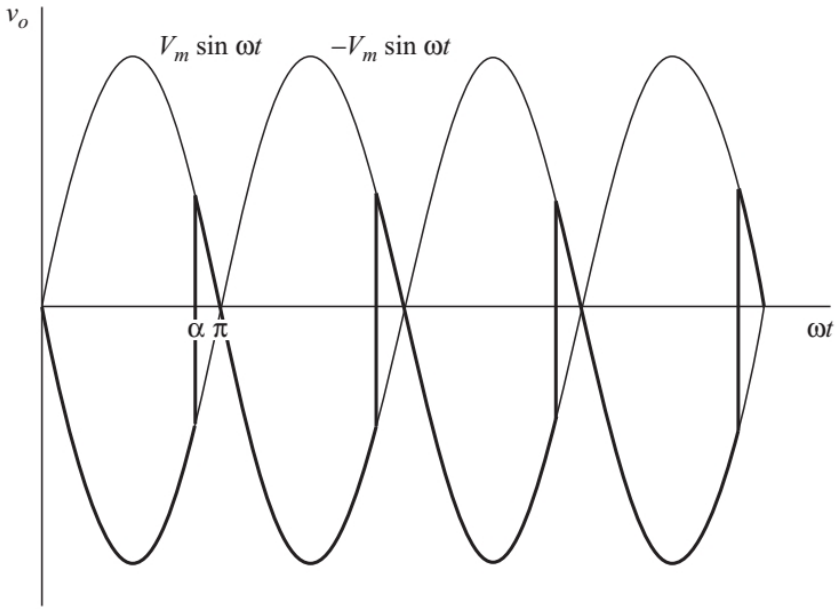

Assuming a large inductor,

$$P_{bridge} = P_{ac} = -I_o V_o \tag{30}$$

Example 4-11

The dc voltage in R+L+E represents the voltage generated by an array of solar cells and has a value of 110 V, connected such that V_{dc}=-110 V. The solar cells are capable of producing 1000 W. The ac source is 120 V_{rms}, R=0.5Ω, and L is large enough to cause the load current to be essentially dc. Determine the delay angle α such that 1000 W is supplied by the solar cell array. Determine the power transferred to the ac system and the losses in the resistance. Assume ideal SCRs.

Solution:

The average current must be

$$I_o = \frac{P_{dc}}{V_{dc}} = \frac{1000}{110} = 9.09A \tag{31}$$

The average output voltage of the bridge is given as

$$V_o = I_o R + V_{dc} = (9.09)(0.5) + (-110) = -105.5V \tag{32}$$

Example 4-11

The required delay angle is determined using (28)

$$\alpha = cos^{-1}\left(\frac{V_o\pi}{2V_m}\right) = cos^{-1}\left(\frac{-105.5\pi}{2\sqrt{2}(120)}\right) = 165.5^\circ \tag{33}$$

Power absorbed by the bridge and transferred to the ac system is determined from

$$P_{ac} = -V_oI_o = (-9.09)(-105.5) = 959W \tag{34}$$

Power absorbed by the resistor is

$$P_R = I_{rms}^2R \approx I_o^2R = (9.09)^2(0.5) = 41W \tag{35}$$

If non-idealities are included e.g., assuming 1V drop across SCR then,

$$V_o = -105.5 - 2 = -107.5V \tag{36}$$

Average load current is

$$I_o = \frac{-17.5 - (-110)}{0.5} = 5.0A \tag{37}$$

Example 4-11

Power is then given as

$$P_{bridge} = (107.5)(5) = 537.5W \tag{38}$$

Average current in each SCR is one-half the average load current.
Power absorbed by each SCR is

$$P_{SCR} = I_{SCR}V_{SCR} = \frac{1}{2}I_oV_{SCR} = \frac{1}{2}(5)(1) = 2.5W \tag{39}$$

Total power loss in the bridge is then 10W.
The power delivered to the load is then 537.5-10=527.5W

Three phase rectifiers

Commonly used in industry for rectification.

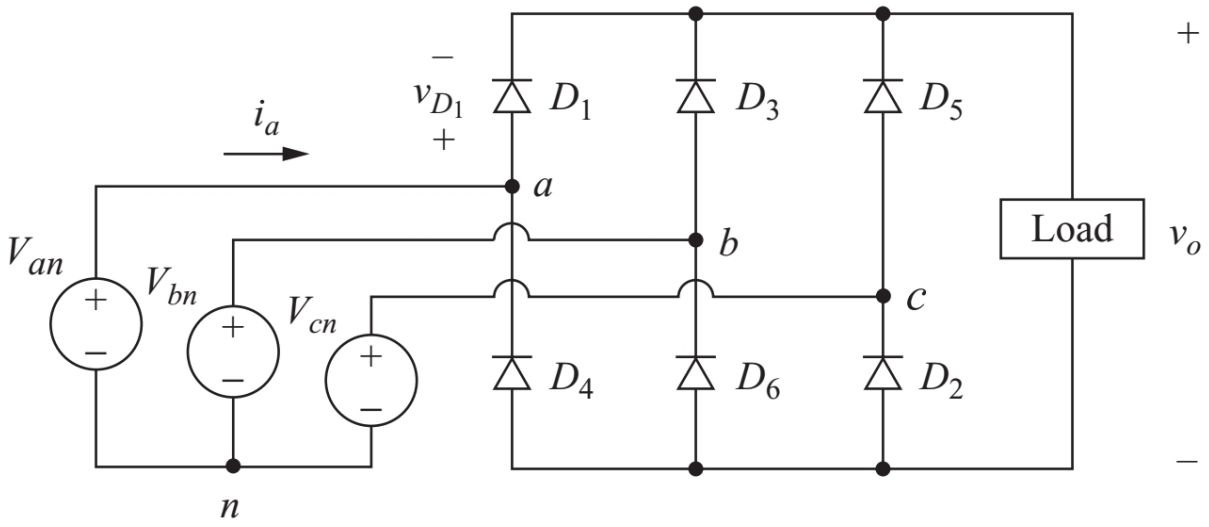

It is assumed that the three phases are balanced and the sequence is a-b-c. The source and diodes are assumed ideal in the initial analysis.

Three phase rectifiers

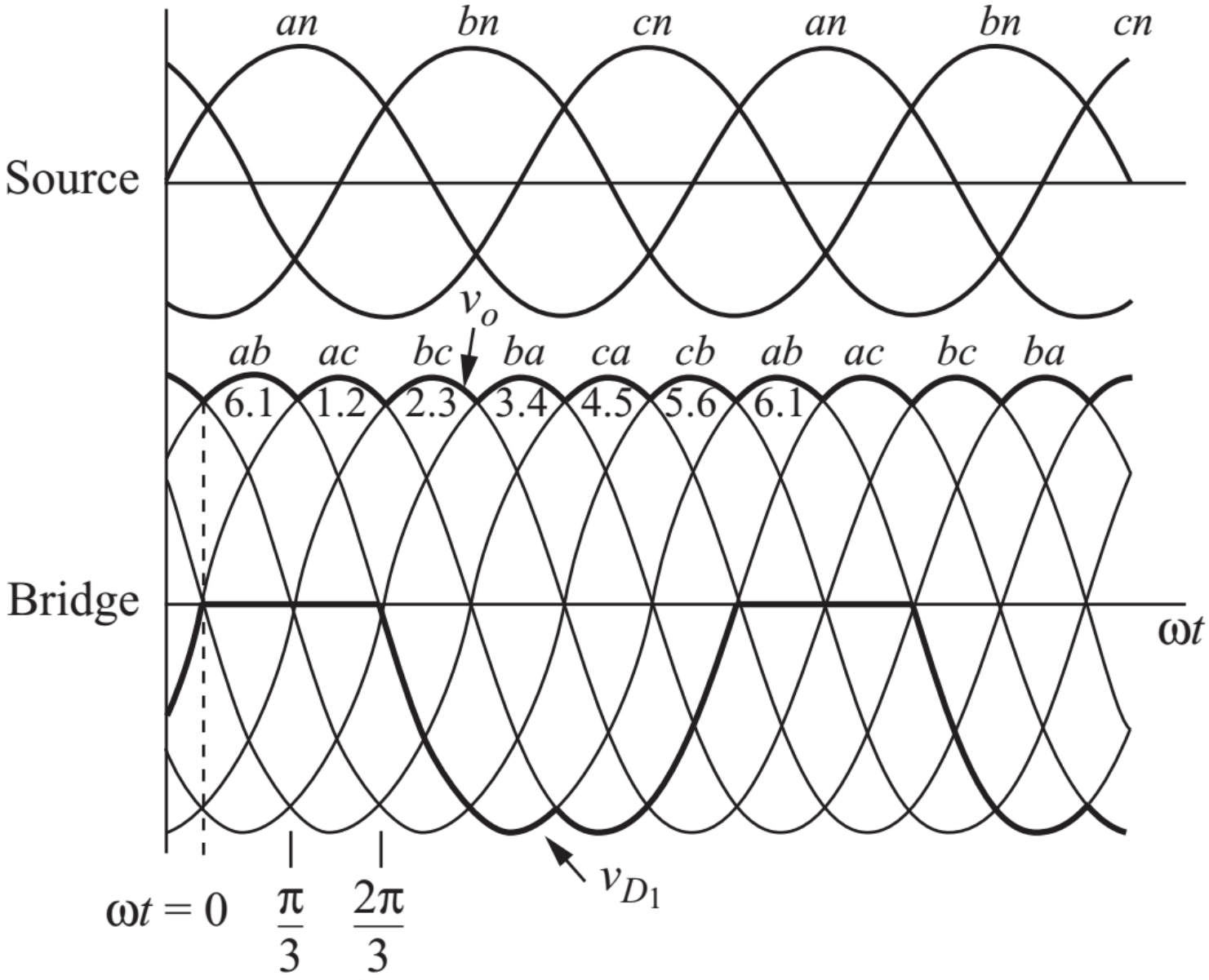

Three phase rectifiers

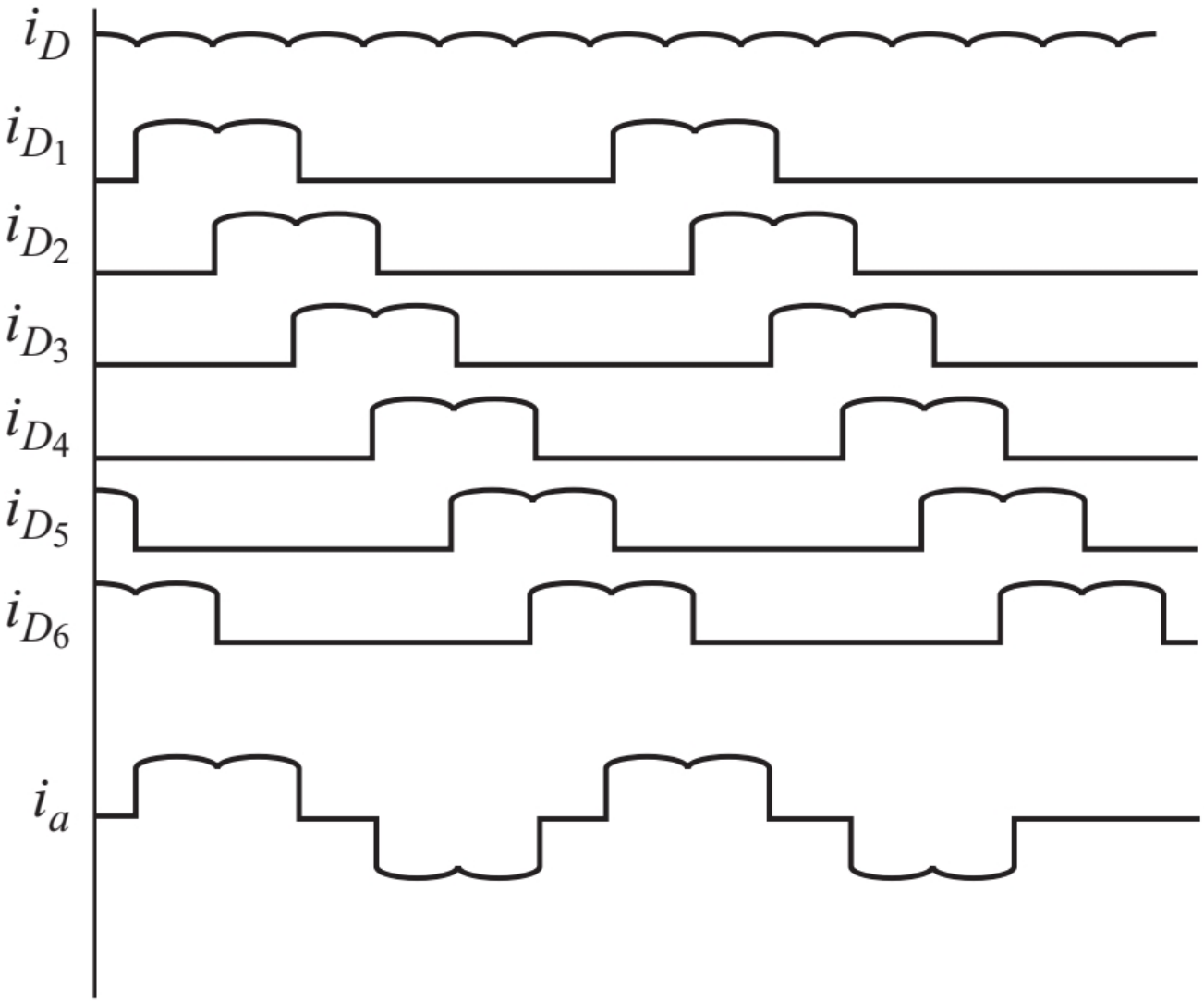

Figure: Current for Resistive load

Three phase rectifiers

Some observations are as follows

- KCL around any path shows that only one diode in the top half of the bridge may conduct at a time ($D_1, D_3 or D_5$). The diode that is conducting will have its anode connected to the phase voltage with highest potential.
- KCL shos that only one diode on lower side conducts at any time (D_2, D_4, D_6). The diode with its cathode connected to the phase voltage with lowest potential.
- Consequently, two diodes in same leg cannot conduct at the same time e.g., D_1 and D_4
- The output voltage across load is one of the line-to-line voltages of the source. For example, when D_1 and D_2 conduct the output voltage is v_{ac}.

Three phase rectifiers

Some observations are as follows

- The diodes that are on are determined by which line-to-line voltage is the highest at that instant. For example, when v_{ac} is the highest line-to-line voltage, the output is v_{ac}
- There are six combinations of line-line- voltages. Considering one period of source to be 360 degree, a transition of the highest line-to-line voltage occur every 60 degree. Because of six transitions that occur each period of the source voltage the circuit is called a six-pulse rectifier.
- The fundamental frequency of the output voltage is 5ω, where ω is the frequency of the three phase source.
- Diodes turn on in the sequence and hence are numbered 1,2,3,4,5,6,....

Three phase rectifiers

The current in a conducting diode is same as load current. Applying KCL at nodes a,b and c

$$\begin{cases} i_a = i_{D_1} - i_{D_4} \\ i_b = i_{D_3} - i_{D_6} \\ i_c = i_{D_5} - i_{D_2} \end{cases} \tag{40}$$

Since each diode conducts one-third of the time , therefore

$$\begin{cases} I_{D,avg} = \frac{1}{3} I_{o,avg} \\ I_{D,rms} = \frac{1}{\sqrt{3}} I_{o,rms} \\ I_{s,rms} = \sqrt{\frac{2}{3}} I_{o,rms} \end{cases} \tag{41}$$

The apparent power from three phase source is

$$S = \sqrt{3} V_{L-L,rms} I_{S,rms} \tag{42}$$

Three phase rectifiers

The peak inverse voltage rating of each diode is the peak line-line voltage. The voltage waveform across diode D_1 is shown. Notice when D_1 is off, the output voltage is v_{ab} when D_3 conducts and is v_{ac} when D_5 is on.

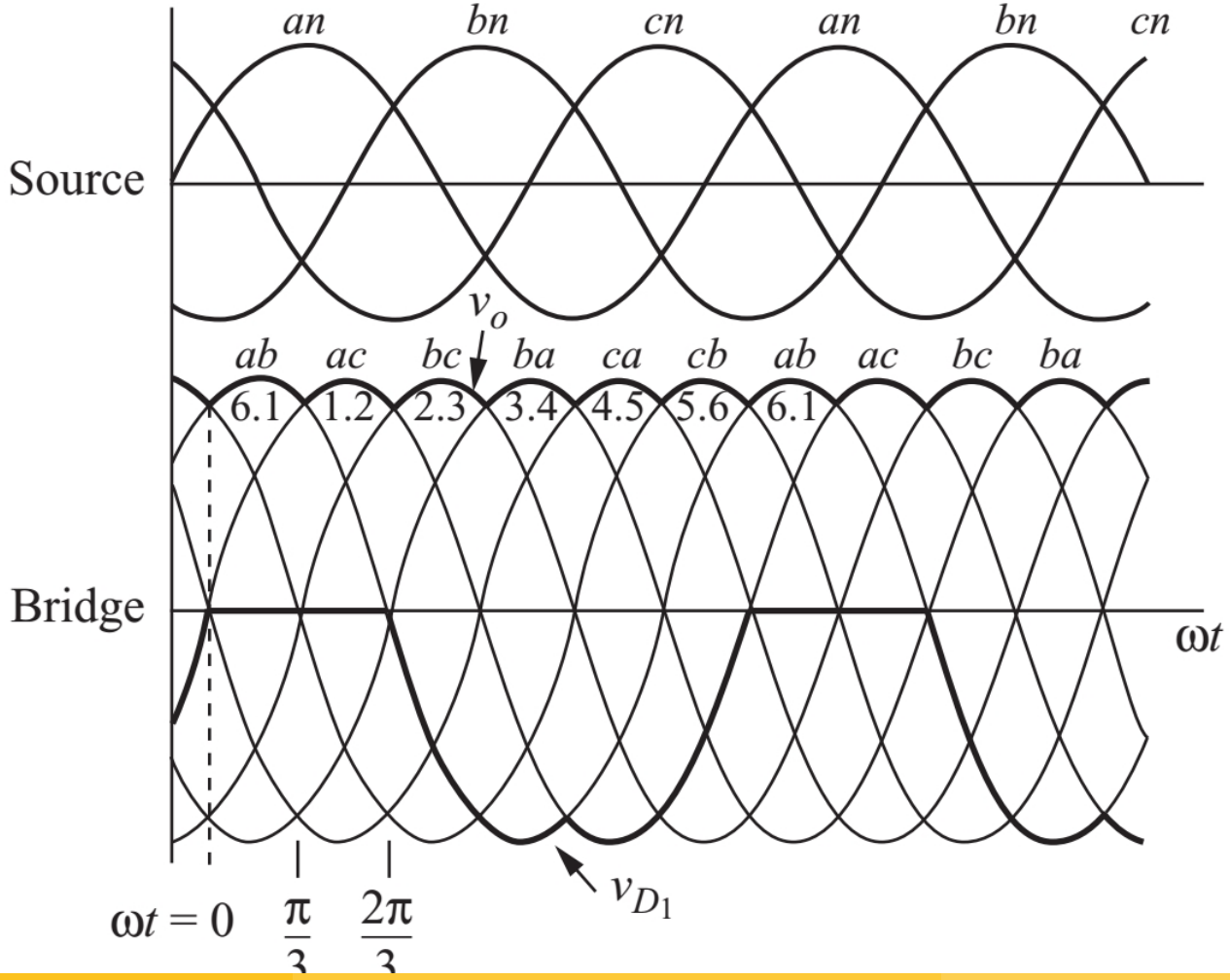

Three phase rectifiers

The periodic output voltage is expressed as

$$v_o(t) = V_0 + \sum_{n=6,12,18,...}^{\infty} V_n cos(n\omega_o t + \pi) \tag{43}$$

where,

$$V_0 = \frac{1}{\pi/3} \int_{\pi/3}^{2\pi/3} V_{m,L-L} sin(\omega t) d(\omega t) = \frac{3V_{m,L-L}}{\pi} = 0.955 V_{m,L-L} \tag{44}$$

where, $V_{m,L-L}$ is the peak line-line voltage of the three phase source which is $\sqrt{2}V_{rms,L-L}$. The amplitudes of the ac voltage terms are

$$V_n = \frac{6V_{m,L-L}}{\pi(n^2-1)} \tag{45}$$

for n=6,12,18,...

Since the output voltage is periodic with period one-sixth of the ac supply voltage, the harmonics are of order $6k\omega$. Therefore, the harmonics of higher order are present and this makes the output near to dc.

Three phase rectifiers
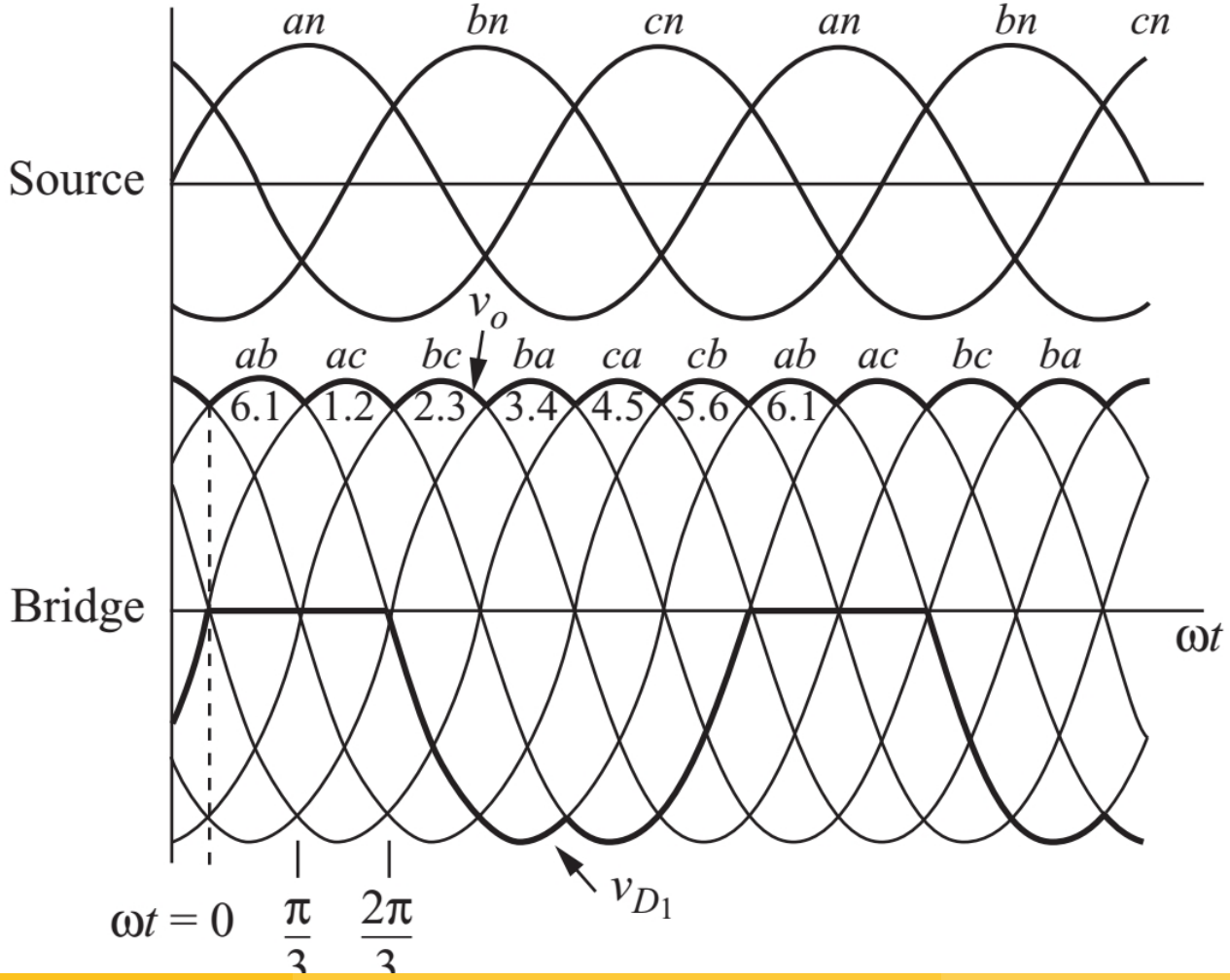
If the load is highly inductive, i.e., constant dc current at the output The voltage waveform across diode D_1 is shown. Notice when D_1 is off, the output voltage is v_{ab} when D_3 conducts and is v_{ac} when D_5 is on.